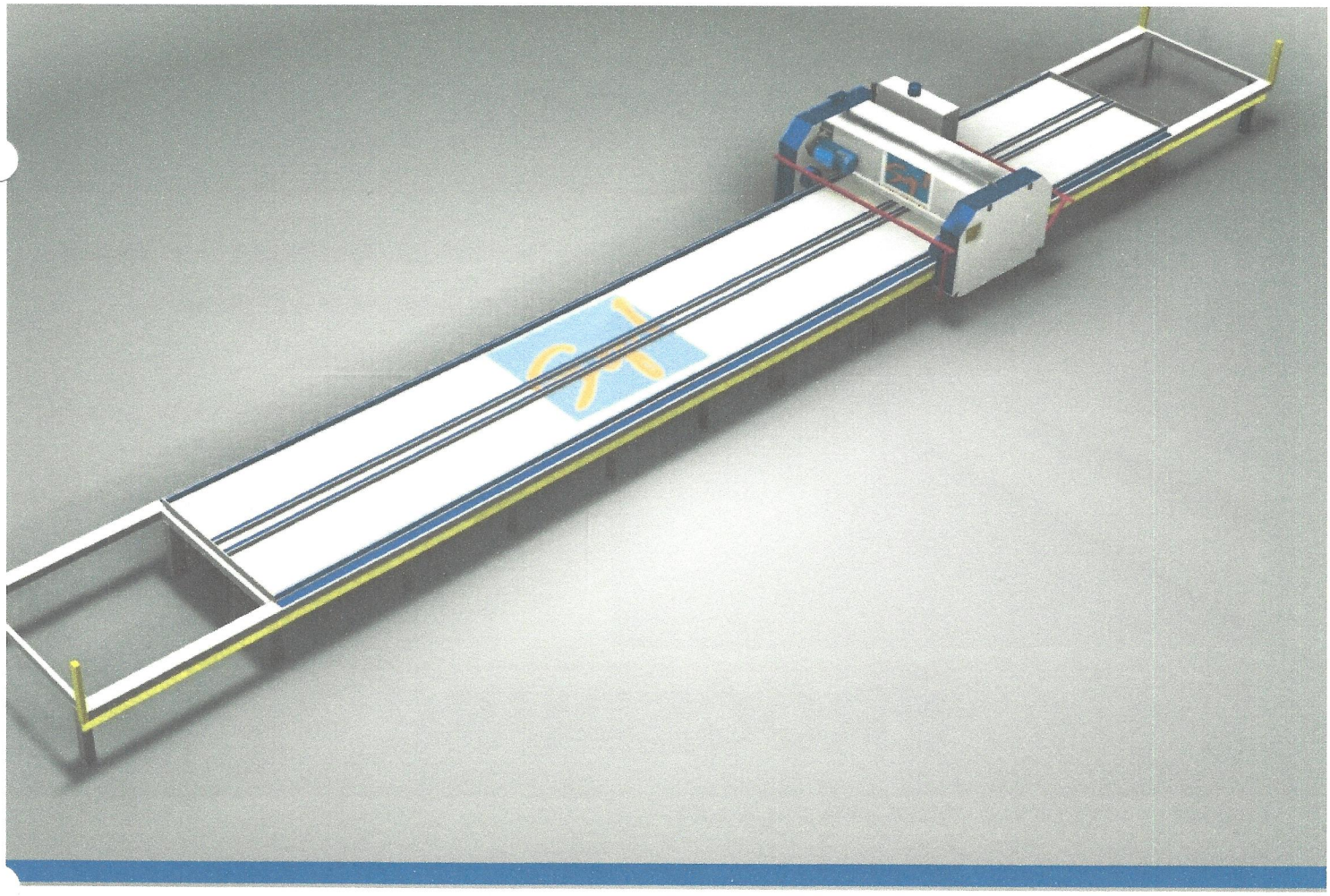

SQ-1 FLOOR TRUSS

*Redesigned with new patent pending features for 2018

WASSERMAN & ASSOCIATES, INC.
www.wasserman-associates.com
2341 Shepard Rd, Milford, NE 68405
Phone: 800-382-0329 Fax: 402-761-2422

Square 1 Design & Manufacture Inc.

KLAISLER

BR-SQ-FT-1710

PURPOSE

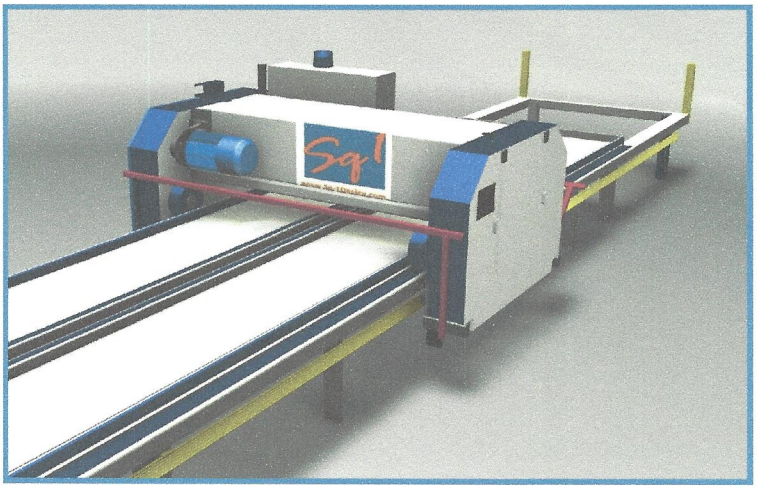

- For use on Open Web Floor Trusses
- Final pressing of nail plates
- Heavy duty design
- Meets long term demand for pressing of plates for multiple shifts
- Produces at 119 feet per minute, alternate speeds are available

PROCEDURE

- Trusses are jigged and plated on a single side
- Rolled and pressed with the SQ1 Gantry
- Truss is transferred to second side of table, plated and pressed again for a finished truss
- Table can feed trusses to be conveyed for stacking
- Emergency Shut-off on control panel
- Safety shut-off beams/bars or safety scanner located at the truss entrance and exit of the machine for safety

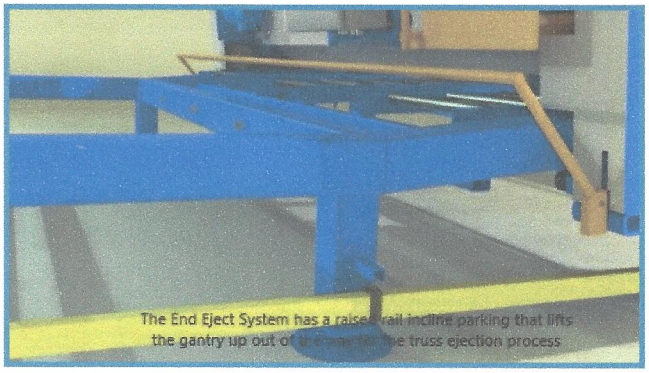

FOOTPRINT

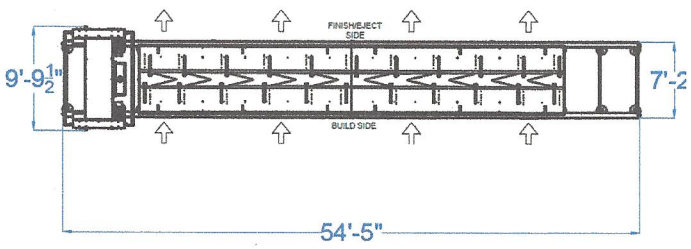

Side Eject View

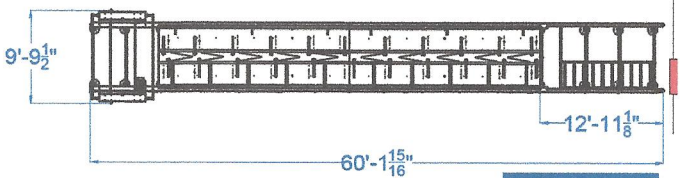

End Eject View

Square 1 Design & Manufacture Inc.

866-647-7771 Sales@Square1Design.com www.Square1Design.com

SPECIFICATIONS

Gantry

Electrical Specifications

- Horsepower: 15 or 20
- Voltage:

		Amps
208	60 HZ	40.2
230	60 HZ	36.2
460	60 HZ	18
415	50 HZ	19.8

- E-stop with interlock
- Photo electric sensor e-stops, safety bar, or safety scanner emergency stop

Table

Electrical Specifications

- Table Mounted Conductor Rail
- Voltage:

		Amps
35... 690	60 HZ	100

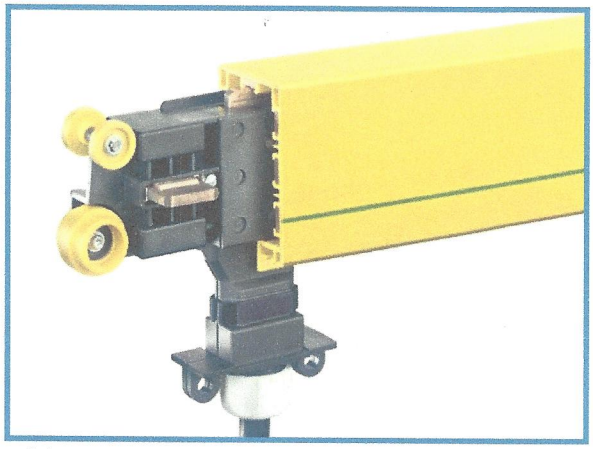

Table Mounted Conductor Rail & Trolley

Gantry

Mechanical Specifications

- Speed: 119 FPM
- Operators Required: Momentary operation,
- Support: Phone
  Onsite ($)
- Gantry Weight: 6,500 lbs
- Double row spherical roller bearings
- 24" roll diameter
- 3 7/16" shaft diameter
- #80 chain drive system
- Dual Motors

Table

Mechanical Specifications

- 7'2" wide x 52' long Structural steel tubing design
- Builds dual 9"-26" trusses
- Builds single 26"-40" trusses (Optional)
- 3/4" A500 CNC cut steel plate
- 3,400 PSI clamping pressure
- 72 gallons of compressed air storage capacity
- 1/2" Tru-Arc camber over 40'
- 12 month warranty

Square 1 Design & Manufacture Inc.

866-647-7771 Sales@Square1Design.com www.Square1Design.com

OPTIONS

GANTRY

- 20 HP motor upgrade
- ~Selective high speed or high torque modes
- ~Intelligent diagnostic codes for rapid troubleshooting
- Automation Including:
- -Visitronics Touchscreen PLC providing:
- ~Magnetek radio frequency transmitter capabilities
- ~Wireless remote operation, eliminating cabling
- ~Onscreen diagnostics
- ~Production metrics*
- ~Records number of trusses completed per shift/day/week
- ~Records lineal footage completed per shift/day/week
- ~Visual and audible alerts when gantry idles past preset time (preset 15 minutes)
- ~Optional SMS/email messaging alerts of production breakdowns
- and accomplishments

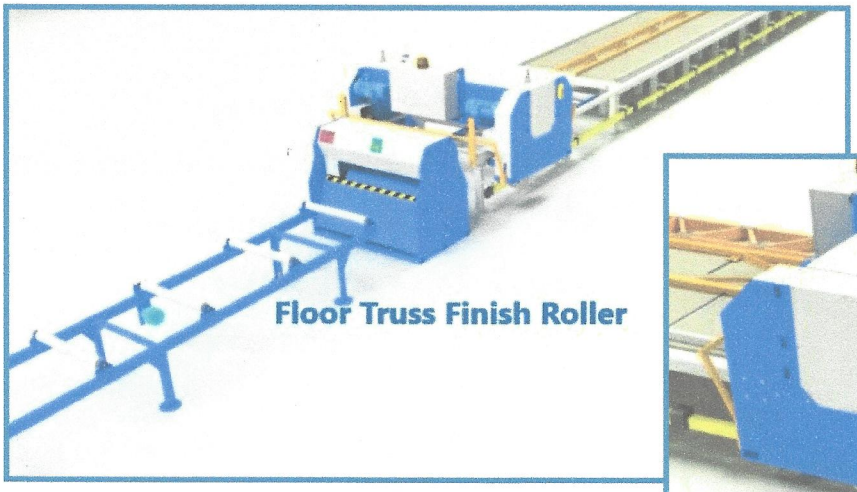

Floor Truss Finish Roller

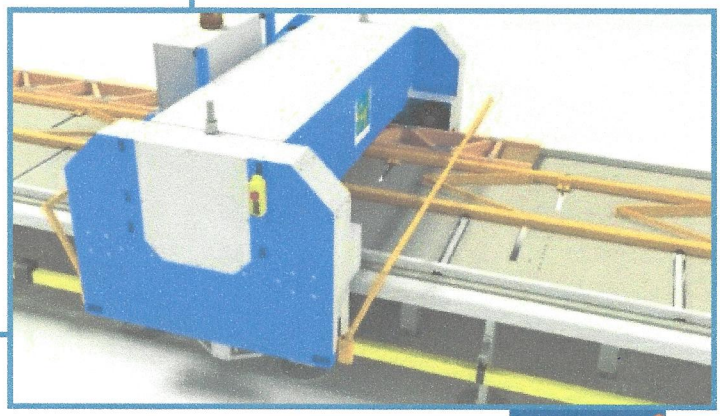

Square 1 Design & Manufacture Inc.

866-647-7771 Sales@Square1Design.com www.Square1Design.com

OPTIONS

TABLE

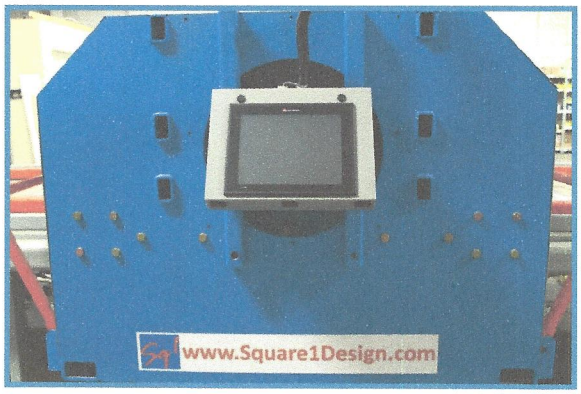

- Up to 32" truss depths
- Flip Jig, to transfer truss to opposite side of table
- End Eject-Idler Rollers
- End Eject-Powered Rollers
- Lift Outs, allows operators to grasp truss
- Edge of table plate storage
- Overhead rack plate storage
- Patent Pending Center Table Clamping, Allows deep truss building in the center of the table. If your table is set to build 26" trusses, this option allows a single depth truss to be built at a time in lieu of two trusses 26" and under

ADDITIONAL REASONS TO PURCHASE

- Dual motors allow the machine to continue operation upon a motor failure, often allowing 90% of normal operations to occur
- Dual motors provide a shorter stopping distance in the event of hazardous situation
- All subcomponents may be sourced locally to ensure minimal downtime
- Air reservoir: up to 72 gallons per table
- Customizations available

Square 1 Design & Manufacture Inc.

866-647-7771 Sales@Square1Design.com www.Square1Design.com
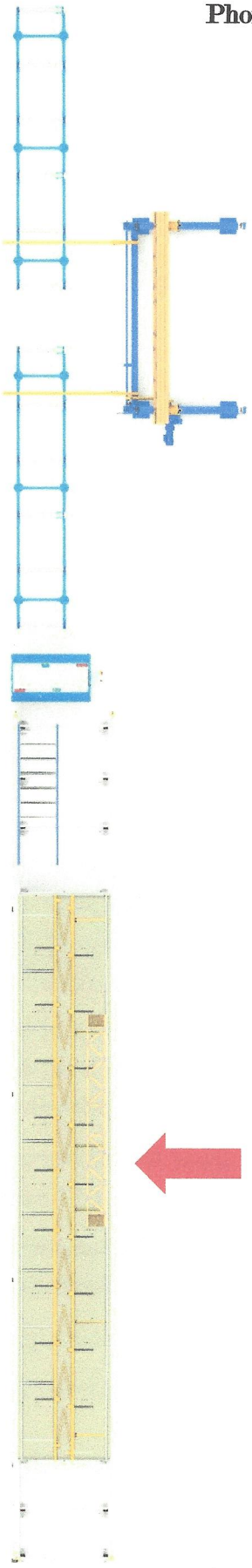
WASSERMAN & ASSOCIATES, INC.
www.wasserman-associates.com
2341 Shepard Rd, Milford, NE 68405
Phone: 800-382-0329 Fax: 402-761-2422